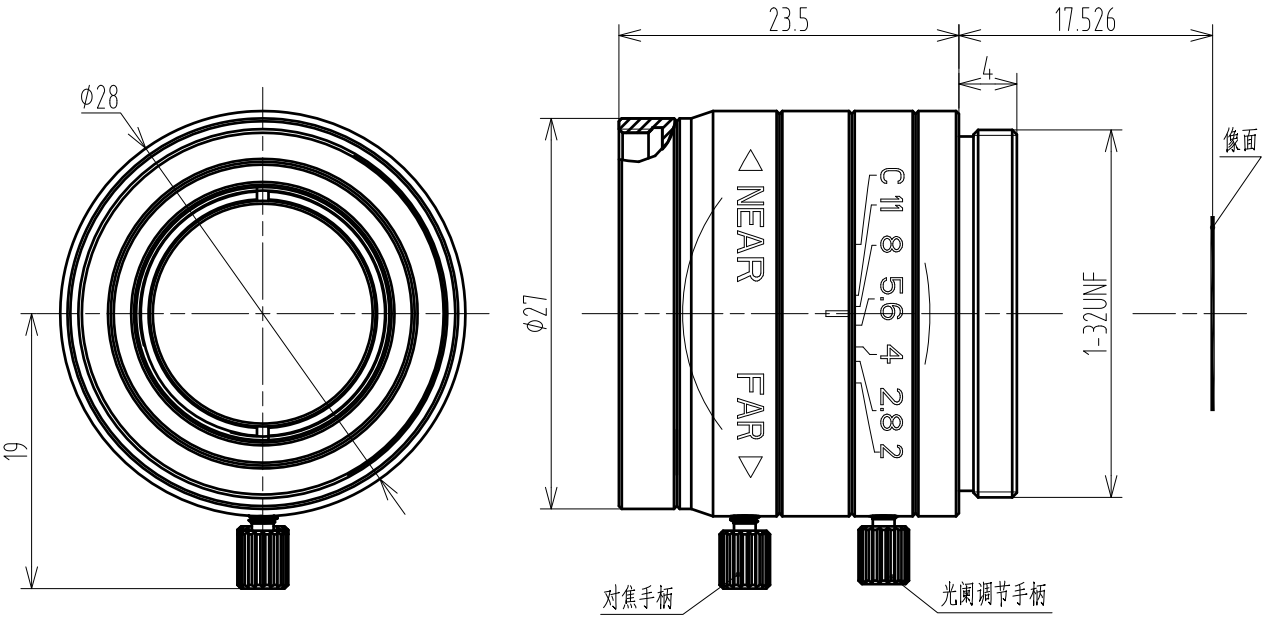

1/1.8" F2.0 C Mount					Working distance	Optical Magnification	1/1.8" Field of View(mm)	
Focal Length		f=25mm			mm		H	V
F/NO		F=1:2.0~C			900	0.028X	254.4	190.8
Image Size		1/1.8"(7.2×5.32mm)	1/2.5"(5.76×4.32mm)	1/3"(4.8×3.6mm)	850	0.030X	240.1	180.1
Angle FOV	H	13.6°	13.4°	11.4°	800	0.032X	225.7	169.3
	V	11.3°	10.3°	8.8°	750	0.034X	211.4	158.5
	D	19°	16.2°	13.8°	700	0.036X	197	147.8
Object Dimension at WD.500mm	H	139.6mm	112.1mm	93.4mm	650	0.039X	182.6	137
	V	104.7mm	84.1mm	70mm	600	0.043X	168.3	126.2
	D	174.5mm	140.1mm	116.7mm	550	0.047X	153.9	115.4
Distortion (TV)		<0.1%			500	0.051X	139.6	104.7
Focus distance(min)		0.1m			450	0.057X	125.2	93.9
Flange back		17.526mm in air			400	0.065X	110.8	83.1
Back focus		13.7mm in air			350	0.074X	96.5	72.3
Filter screw size		M25.5×P0.5			300	0.088X	82.1	61.6
Front/Rear Effective Dia		Front Φ15.2mm Rear Φ6.6mm			250	0.106X	67.7	50.8
Mount		C-Mount			200	0.135X	53.3	40
Temperature Range		-10~+50°C			150	0.186X	38.9	29.2
Storage Temperature Range		-20~+60°C			100	0.296X	24.4	18.3

TOLERANCE:
. LINEARITY TOLERANCES ±0.05
. ANGULAR TOLERANCES ARE±30'
. DRAFT ANGLES AREA±0.5°/SIDE

三角法

材料(环保)	单位	比例
---	mm	2:1

标记	处数	更改文件号	担当	变更日期					
2	1		朱周德	2016,06,08	校对			名称	FA2501C规格图
1	1		朱周德	2015,12,24	审核			代号	FA2501C-SPEC
					批准				
					设计	朱周德	2015-07-20		

页码 1/1

版本 V2

A4

CHIOPT